DELTA

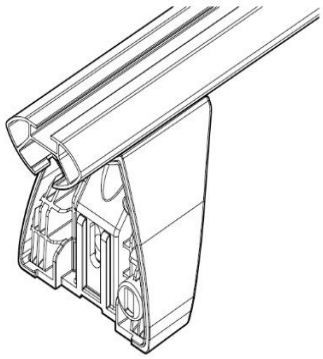

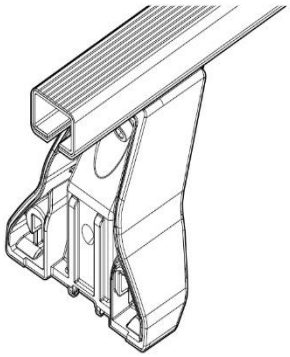

OMEGA

PAG. 4

FIXING KIT DELTA

1

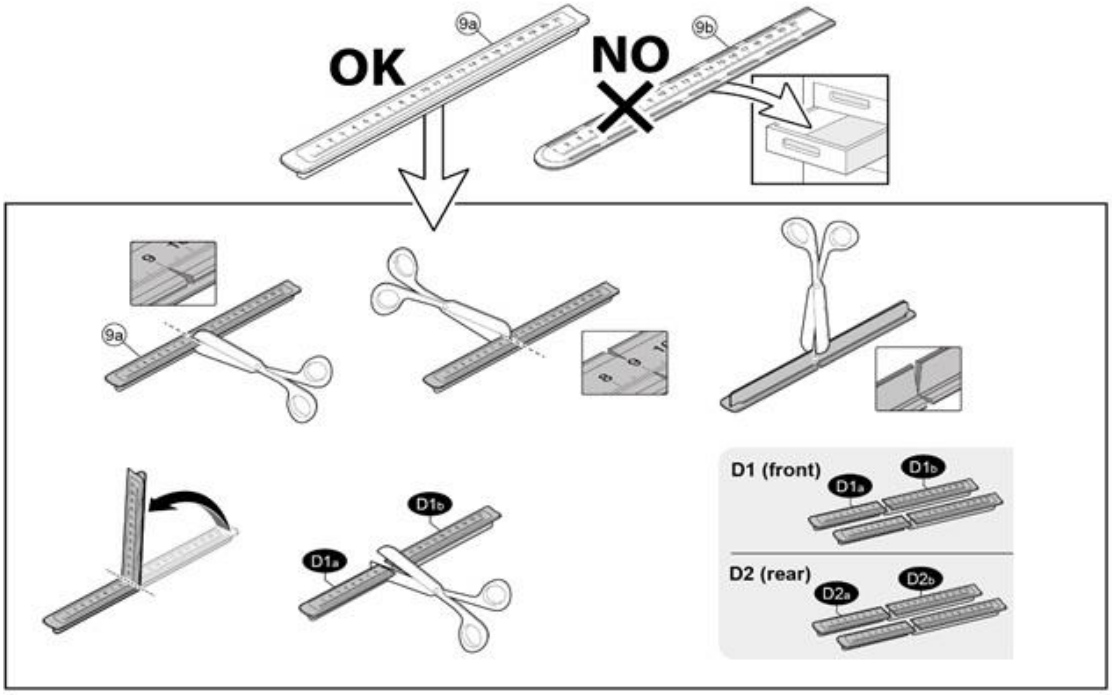

MANUFACTURER	MODEL CAR	DOORS	MODEL YEAR	D1	D2
AUDI	*A6 (4A/C8)*	*4*	*18>*	*4,7*	*5,5*
AUDI	*Q2 (GA)*	*5*	*16>*	*6,2*	*3,6*
CITROEN	*C3 (Mk3) Aircross*	*5*	*17>*	*8,2*	*5,2*
OPEL / VAUXHALL	*Astra (K)*	*5*	*16>21*	*5,9*	*4,7*
OPEL / VAUXHALL	*Crossland*	*5*	*20>*	*6,4*	*7,0*
OPEL / VAUXHALL	*Crossland X*	*5*	*17>20*	*6,4*	*7,0*
RENAULT	*Megane IV*	*5*	*16>*	*6,9*	*6,7*
VOLVO	*S60 (Y20)*	*4*	*10>18*	*6,8*	*9,2*
VOLVO	*S80*	*4*	*06>16*	*9,3*	*7,1*
VOLVO	*V40*	*5*	*12>16*	*5,2*	*1,8*
VOLVO	*V40*	*5*	*16>*	*5,3*	*1,6*
VOLVO	*V60*	*5*	*10>11*	*6,8*	*6,8*
VOLVO	*V60/V60 Cross Country*	*5*	*11>18*	*6,8*	*6,8*
VOLVO	*V70*	*5*	*07>16*	*7,8*	*6,3*

2

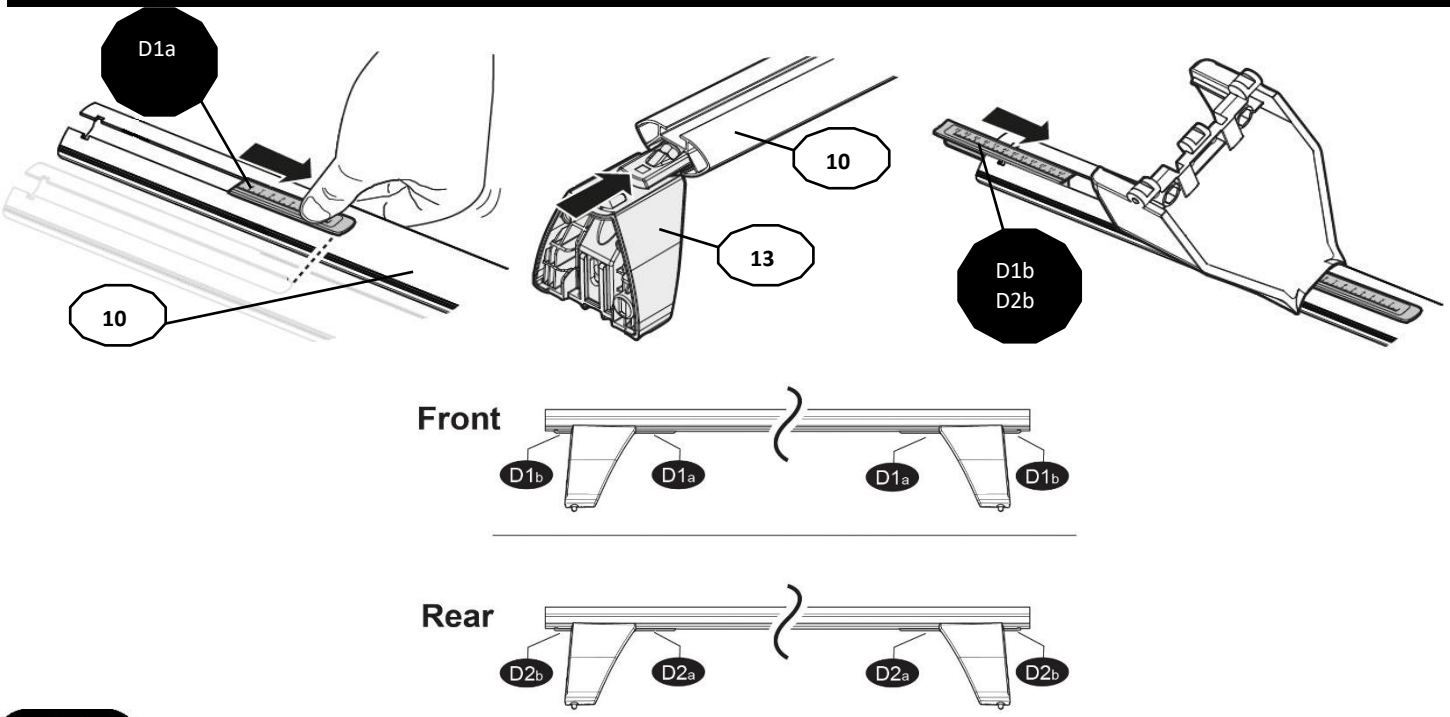

3

x4

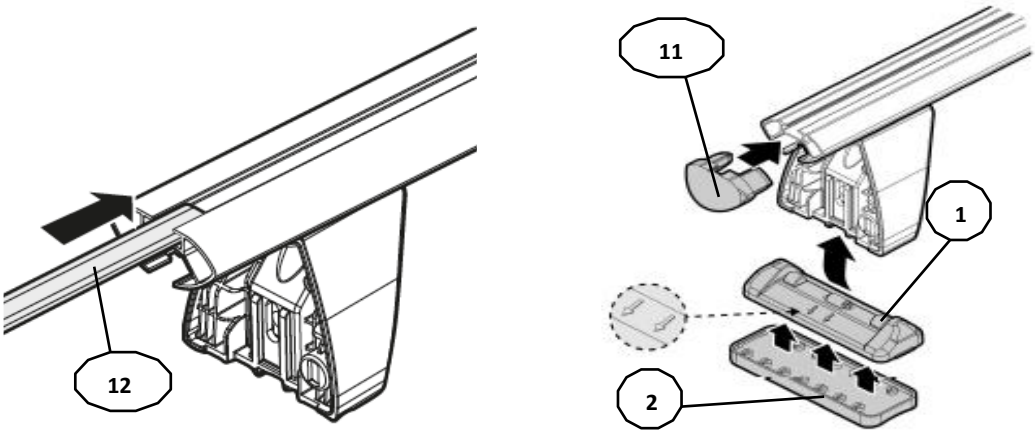

4

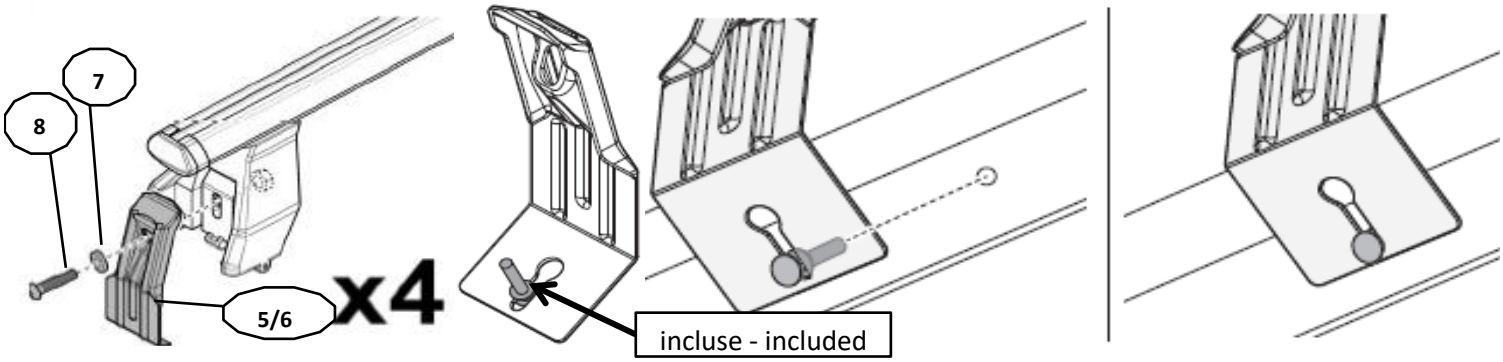

MANUFACTURER	MODEL CAR	DOORS	MODEL YEAR
AUDI	*A6 (4A/C8)*	*4*	*18>*
AUDI	*Q2 (GA)*	*5*	*16>*
CITROEN	*C3 (Mk3) Aircross*	*5*	*17>*
OPEL / VAUXHALL	*Astra (K)*	*5*	*16>21*
OPEL / VAUXHALL	*Crossland*	*5*	*20>*
OPEL / VAUXHALL	*Crossland X*	*5*	*17>20*
RENAULT	*Megane IV*	*5*	*16>*
VOLVO	*S60*	*4*	*10>18*
VOLVO	*S80*	*4*	*06>16*
VOLVO	*V40*	*5*	*12>16*
VOLVO	*V40*	*5*	*16>*
VOLVO	*V60*	*5*	*10>11*
VOLVO	*V60/V60 Cross Country*	*5*	*11>18*

Front	Rear
5	**6**

37	**37R**
2x	**2x**

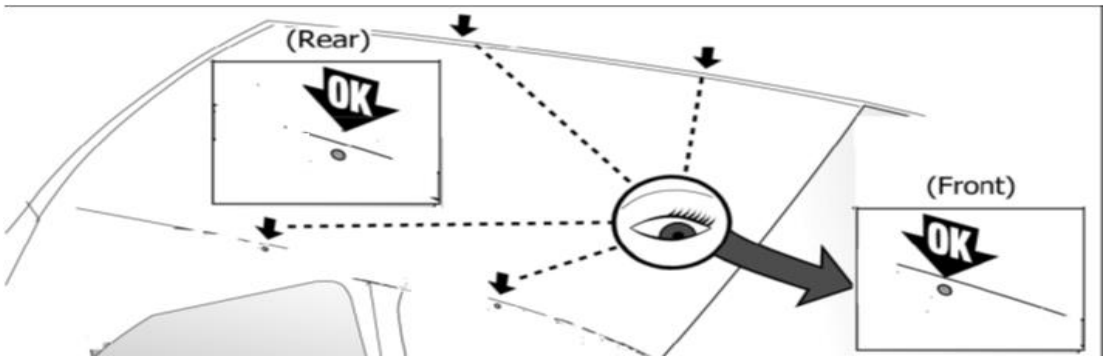

MANUFACTURER	MODEL CAR	DOORS	MODEL YEAR
VOLVO	*V70*	*5*	*07>16*

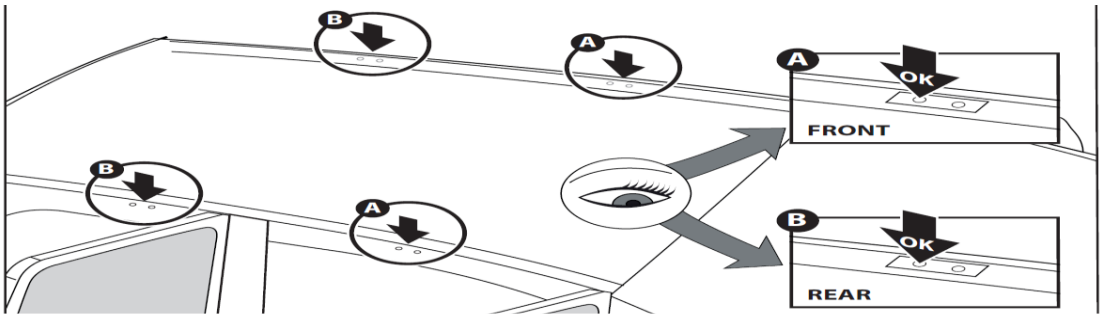

5

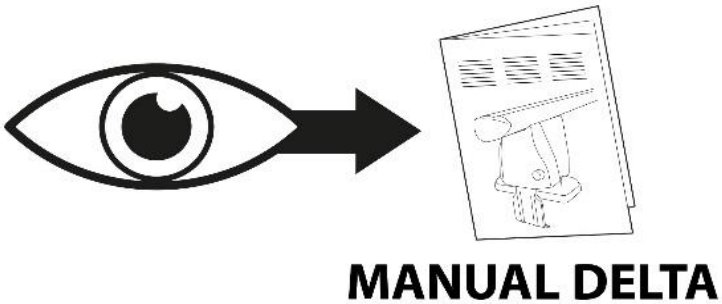

FIXING KIT OMEGA

2

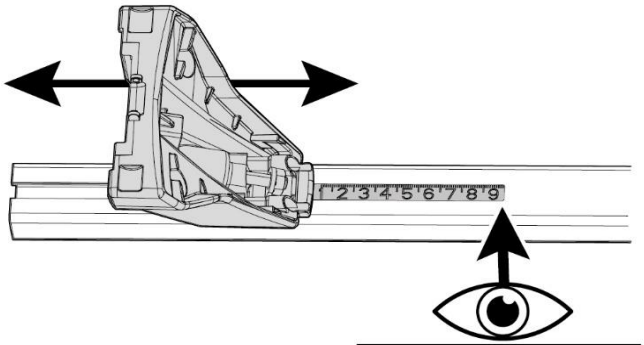

D1 (Front)	D2 (Rear)
xxx	xxx

MANUFACTURER	MODEL CAR	DOORS	MODEL YEAR	D1	D2
AUDI	*A6 (4A/C8)*	*4*	*18>*	*4,7*	*5,5*
AUDI	*Q2 (GA)*	*5*	*16>*	*6,2*	*3,6*
CITROEN	*C3 (Mk3) Aircross*	*5*	*17>*	*8,2*	*5,2*
OPEL / VAUXHALL	*Astra (K)*	*5*	*16>21*	*5,9*	*4,7*
OPEL / VAUXHALL	*Crossland*	*5*	*20>*	*6,4*	*7,0*
OPEL / VAUXHALL	*Crossland X*	*5*	*17>20*	*6,4*	*7,0*
RENAULT	*Megane IV*	*5*	*16>*	*6,9*	*6,7*
VOLVO	*S60*	*4*	*10>18*	*6,8*	*9,2*
VOLVO	*S80*	*4*	*06>16*	*9,3*	*7,1*
VOLVO	*V40*	*5*	*12>16*	*5,2*	*1,8*
VOLVO	*V40*	*5*	*16>*	*5,3*	*1,6*
VOLVO	*V60*	*5*	*10>11*	*6,8*	*6,8*
VOLVO	*V60/V60 Cross Country*	*5*	*11>18*	*6,8*	*6,8*
VOLVO	*V70*	*5*	*07>16*	*7,8*	*6,3*

3

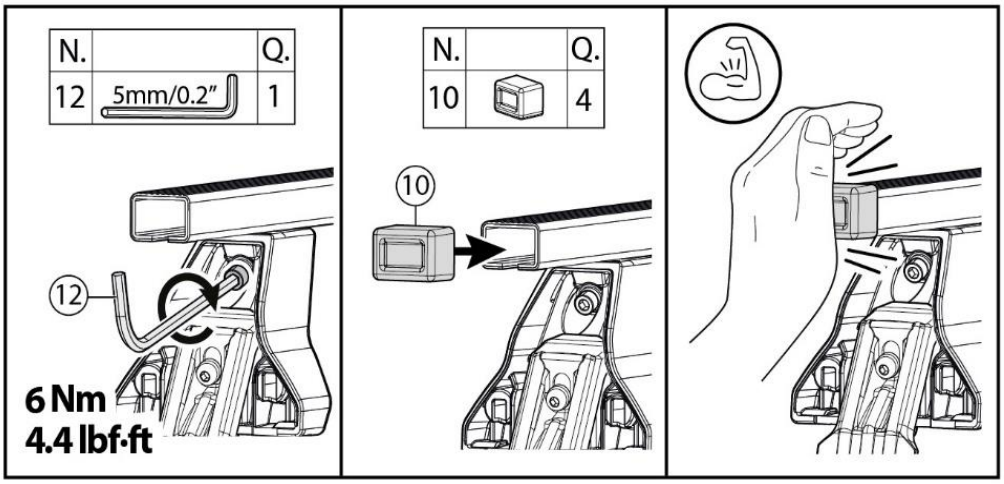

4

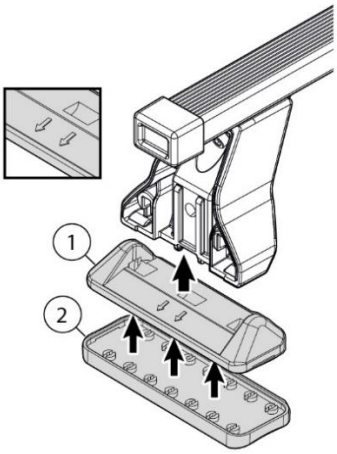

5

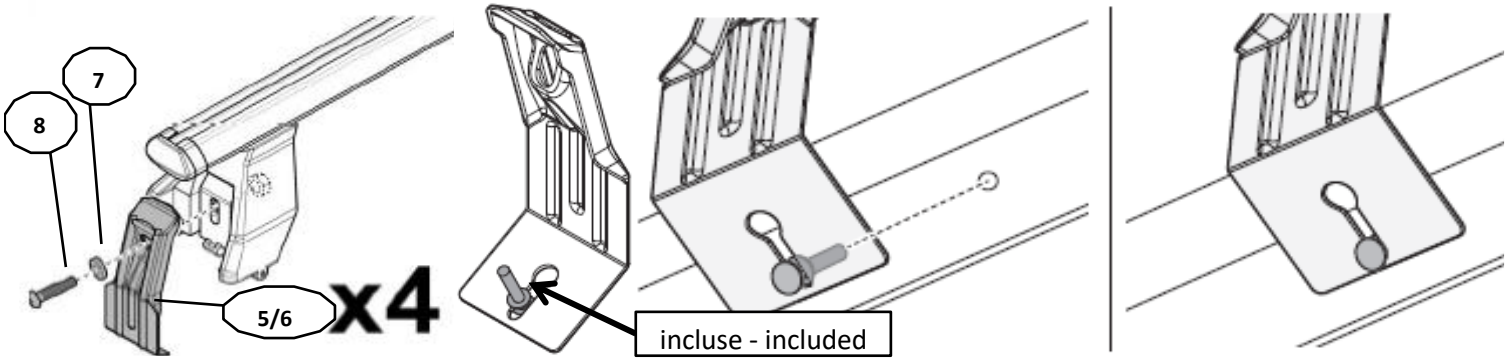

MANUFACTURER	MODEL CAR	DOORS	MODEL YEAR
AUDI	*A6 (4A/C8)*	*4*	*18>*
AUDI	*Q2 (GA)*	*5*	*16>*
CITROEN	*C3 (Mk3) Aircross*	*5*	*17>*
OPEL / VAUXHALL	*Astra (K)*	*5*	*16>21*
OPEL / VAUXHALL	*Crossland*	*5*	*20>*
OPEL / VAUXHALL	*Crossland X*	*5*	*17>20*
RENAULT	*Megane IV*	*5*	*16>*
VOLVO	*S60*	*4*	*10>18*
VOLVO	*S80*	*4*	*06>16*
VOLVO	*V40*	*5*	*12>16*
VOLVO	*V40*	*5*	*16>*
VOLVO	*V60*	*5*	*10>11*
VOLVO	*V60/V60 Cross Country*	*5*	*11>18*

Front	Rear
5	**6**

37	**37R**
2x	**2x**

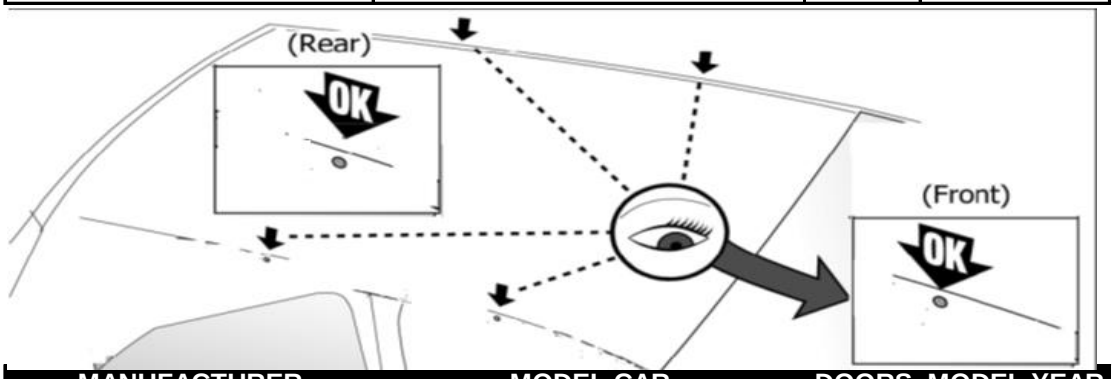

MANUFACTURER	MODEL CAR	DOORS	MODEL YEAR
VOLVO	*V70*	*5*	*07>16*

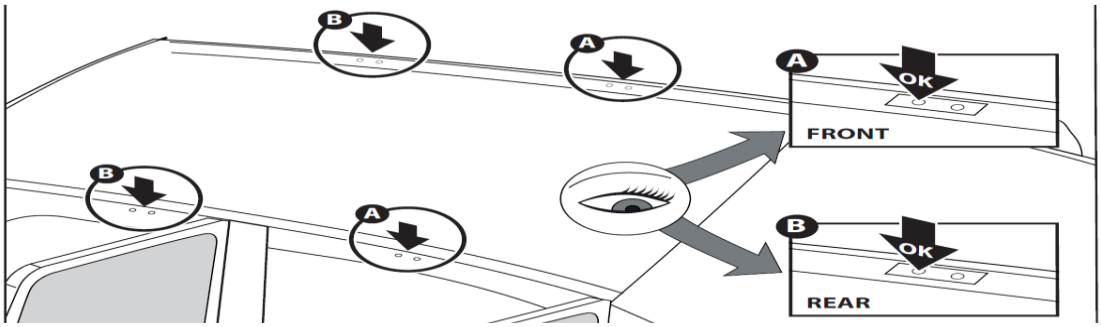

6

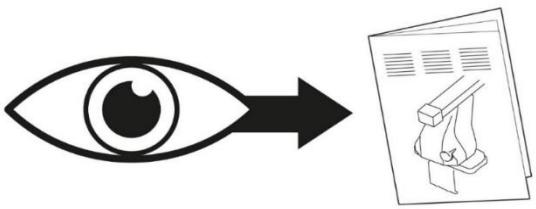

MANUAL OMEGA

NOTE: